vk3pe's RADUINO STYLE VFO, ON 50x50MM PCB

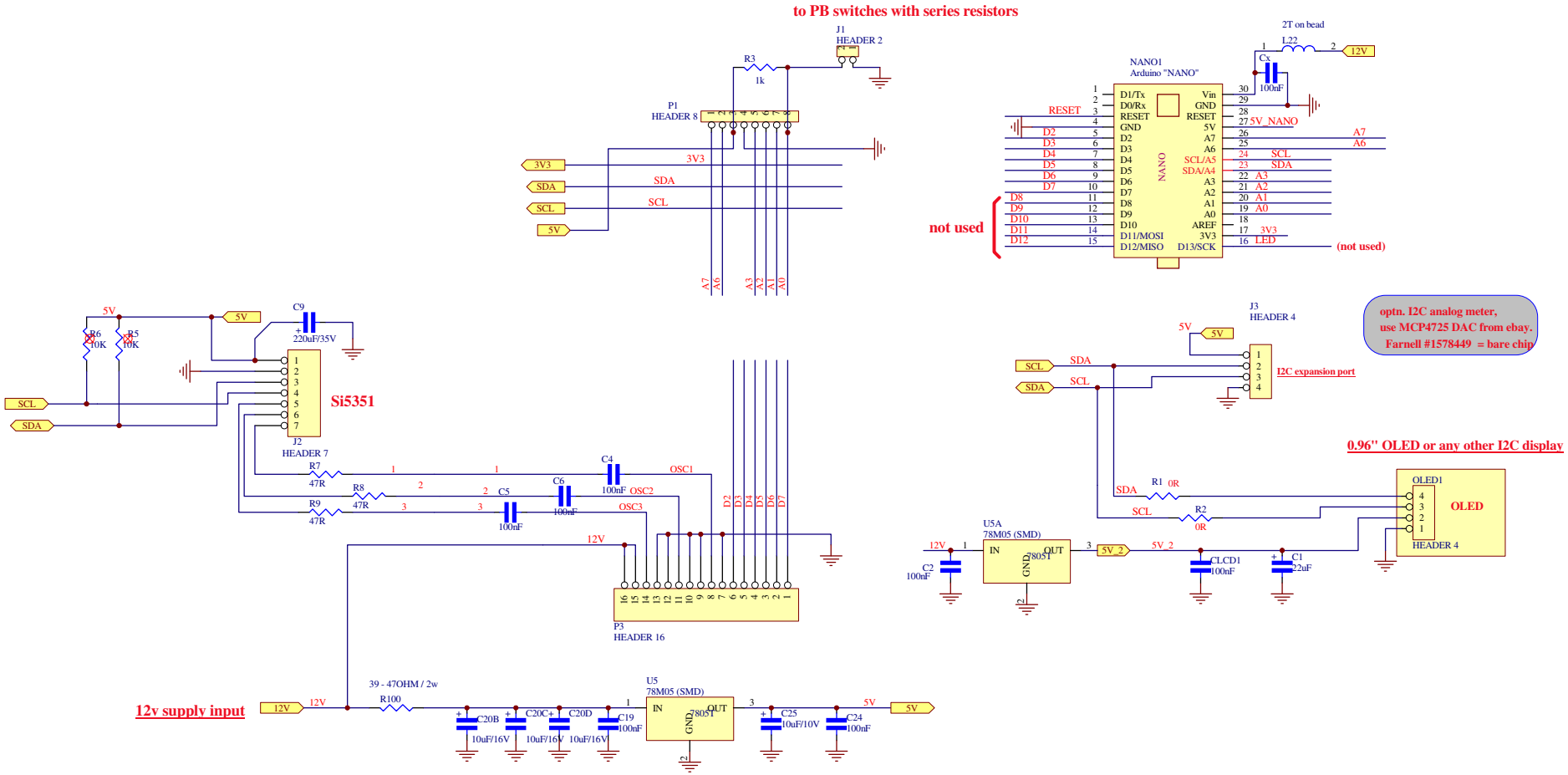

REF PCB RADUINO_50X50_1.1.PCB

281218 DRAFTED VK3PE

Title		DRAWN BY:
Size: A3	Date: 8-Jan-2019 Sheet 1 of 1 Time: 10:38:35	VK3PE (C) 2007-2016

E:\PROJECTS 2018\RADUINO_50X50MM_\RADUINO_50X50_1.sch