tinySA RF SECTION V1/V2 per M0WID pinout

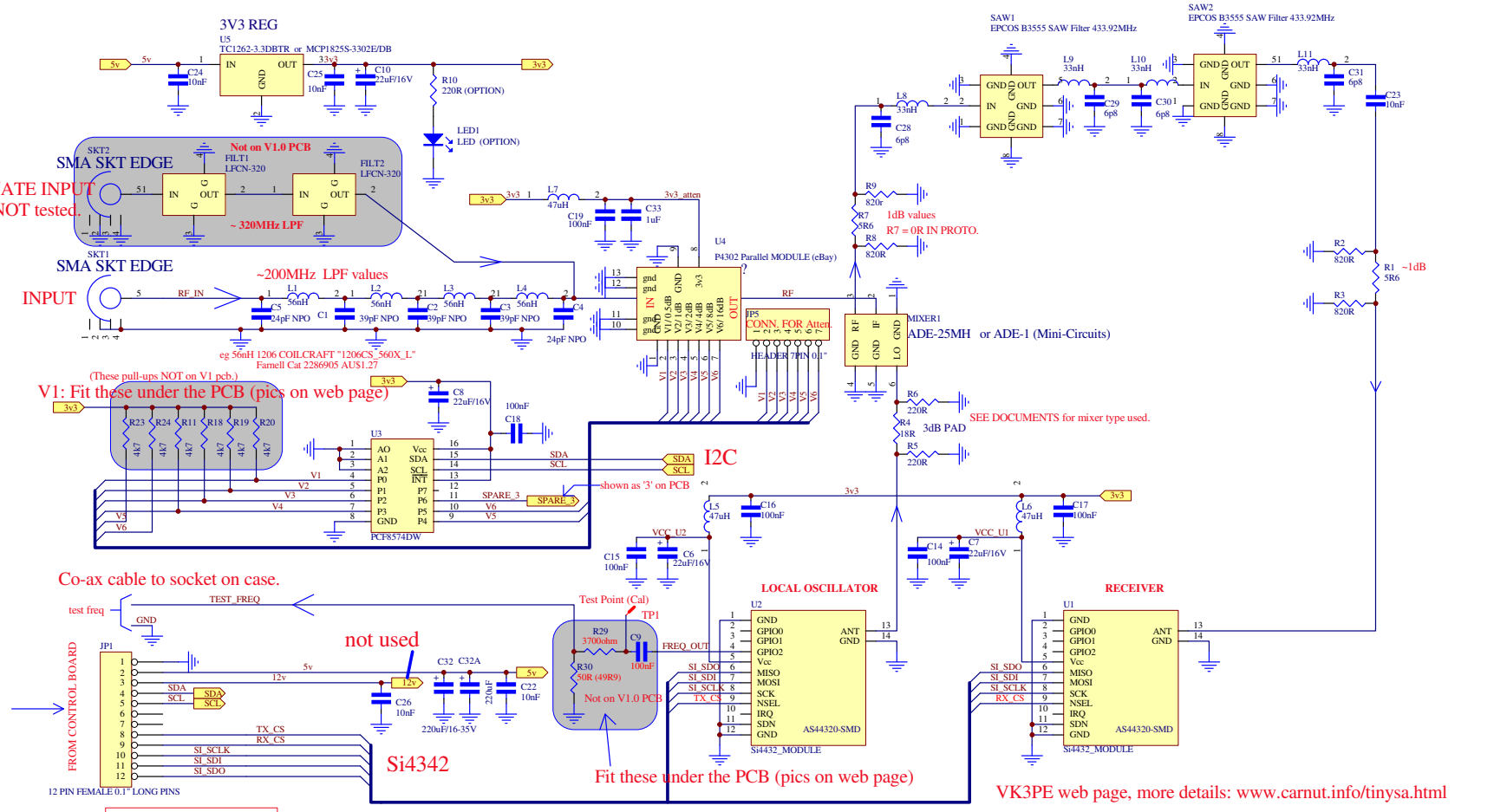

On V1.0 pcb only, TX_CS AND RX_CS are reversed ! See web page for details of fix.

SHOWN HERE CORRECT FOR V2.

This Schematic is based on original work by PD0EK for a simple and low cost Spectrum Analyzer, known as "tinySA".

The Schematic now uses an ESP32 Micro instead of original NANO board.

Bill of material, and other build documents will soo be available at www.carnut.info/tinySA.

9th July corrected SAW filter part number
8th July 2020, tidy up
29th April minor tidy up
31st mar swapped tx and rx CS's PCB = tinySA_V2b.PCB
V2 PCB 290320 DRAFT
100320_1 Vers 1.0 pcb

Based on original design by Erik, PD0EK
ref HBTE groups.io "https://groups.io/g/HBTE"

Title: tinySA		DRAWN BY: VK3PE
Size: A3	Date: 12-Jul-2020 Time: 12:46:42	Sheet 2 of 3
		(C) 2007-2019

D:\PROJECTS 2020\tinySA\v2\tinySA_RF_V2.sch